PASSENGER'S SIDE COMPARTMENTS CONTAIN THE FOLLOWING:

COMPARTMENT P1 CONTAINS:
- (1) FLOOR MOUNTED TRAY
- (2) HYDRAULIC REELS W/150' OF HOSE
- (1) 30A,240V RECEPTACLE
- (1) 23"DP ADJ SLIDE OUT TRAY
- (1) 22"DP ADJ SHELF
-
-
-

COMPARTMENT P2 CONTAINS:
- (1) SPEEDLAY W/150' OF 1.75" HOSE
- (1) FLOOR MOUNTED TRAY WITH TOOLBOARD
- (1) FOAM CONTROL PANEL
-

COMPARTMENT P3 CONTAINS:
- (2) 42"DP ADJ SLIDE OUT/TILT TRAYS
- (1) 42"DP ADJ SHELF
- (1) 12V TERMINAL STRIP
-
-
-

COMPARTMENT P4 CONTAINS:
- (2) 42"DP ADJ SLIDE OUT/TILT TRAYS
- (1) 12V TERMINAL STRIP
- (1) 20A,120V DUPLEX RECEPT(SHORELINE)
-
-

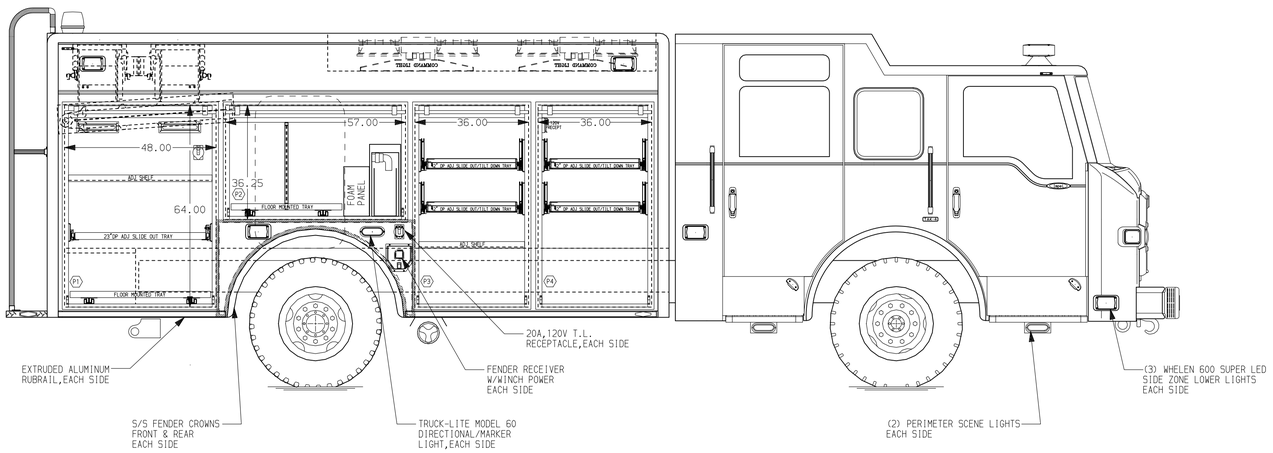

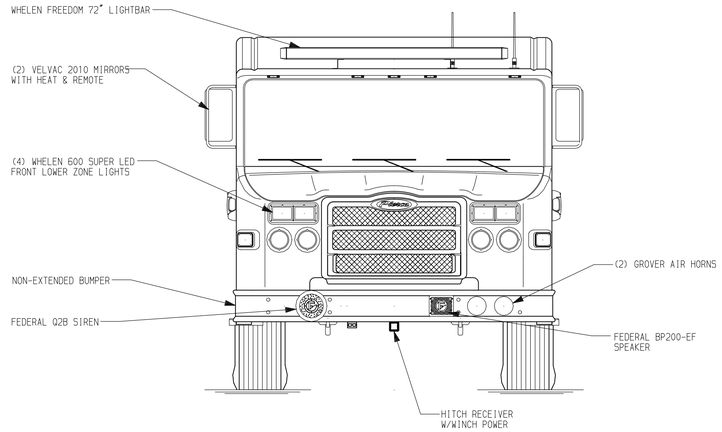

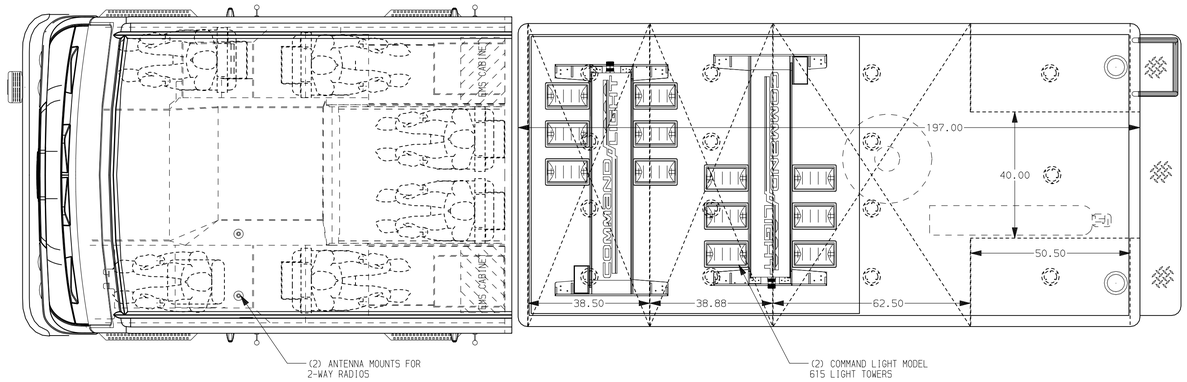

REAR COMPARTMENT CONTAINS THE FOLLOWING:

COMPARTMENT R1 CONTAINS:
- (1) RACK FOR 10' ATTIC LADDER
- (1) RACK FOR 17' LITTLE GIANT LADDER
- (1) RACK FOR BACKBOARDS
- (1) DOT AIR STORAGE BOTTLE
- (1) ANSUL SYSTEM 100 GALLON TANK
- (1) ADJUSTABLE SHELF
- (2) ADJUSTABLE SLIDE OUT TRAYS
- (1) HORIZONTAL FLOOR EXTENSION
- (1) FLOOR MOUNTED TRAY
- (1) STOKES BASKET RACK
- (1) VERTICAL COMPARTMENT DIVIDER

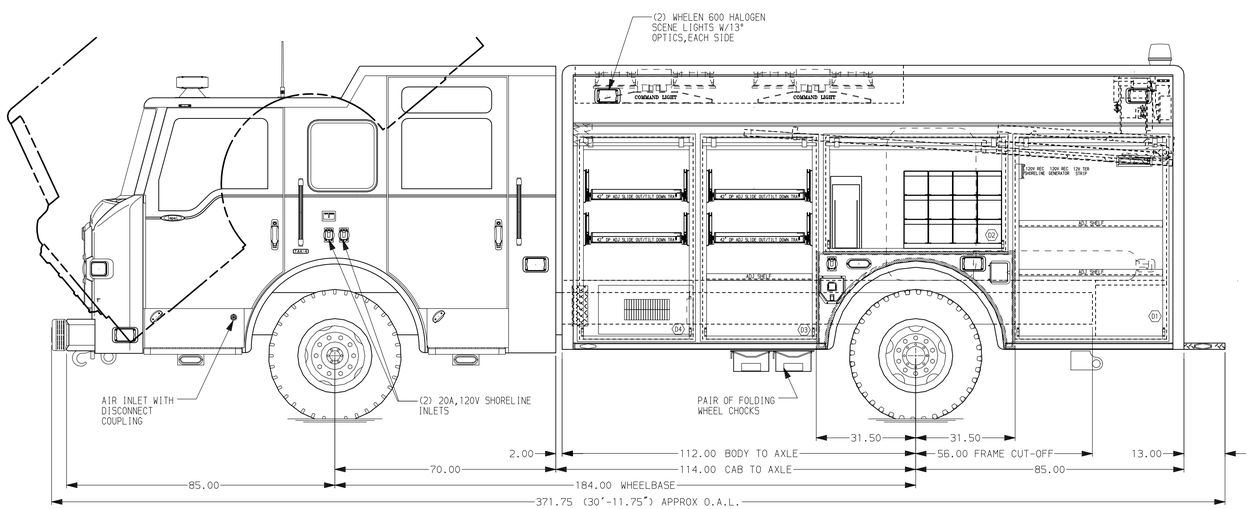

DRIVER'S SIDE COMPARTMENTS CONTAIN THE FOLLOWING:

COMPARTMENT D1 CONTAINS:
- (1) ELECTRIC CORD REEL W/100' OF 10/3 YELLOW CORD
- (1) 20A,120V T.L. RECEPT.(SHORELINE)
- (1) 20A,120V T.L. RECEPT.(GENERATOR)
- (1) 12V TERMINAL STRIP
- (2) 22"DP ADJ SHELVES

COMPARTMENT D2 CONTAINS:
- (1) RACK FOR 12 SCBA BOTTLES
- (1) SPEEDLAY W/150' OF 1.75" HOSE
-
-
-

COMPARTMENT D3 CONTAINS:
- (2) 42"DP ADJ SLIDE OUT/TILT TRAYS
- (1) 42"DP ADJ SHELF
-
-
-

COMPARTMENT D4 CONTAINS:
- (2) 42"DP ADJ SLIDE OUT/TILT TRAYS
- (1) CIRCUIT BREAKER PANEL
- (1) GENERATOR METER PANEL
- (2) COMMAND LIGHT CONTROLLERS
- (1) KUSSMAUL PUMP PLUS 1200 CHARGER
-
-

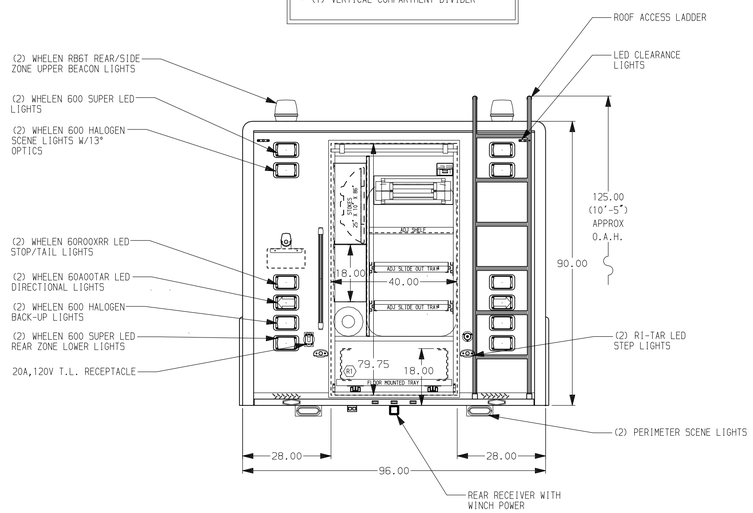

NOTE

DIMENSIONS SHOWN ARE APPROXIMATE AND ARE SUBJECT TO MINOR DEVIATIONS AS MAY OCCUR OR BE NECESSARY IN CONSTRUCTION.
MINOR DETAILS NOT SHOWN.

NOTES:
1. INSTA-CHAIN AUTOMATIC TIRE CHAINS
2. FLOOR IN CAB TO BE PADDED RUBBER
3. ONAN 30kW SINGLE PHASE PTO DRIVEN GENERATOR LOCATED BETWEEN THE FRAME RAILS

SIDE ROLL PROTECTION
FRONTAL IMPACT PROTECTION
MAXIMUM O.A.L. 32'-0"

REV	DATE	BY	CH
1	14AUG08	DHE	TEO
2	13AUG08	DHE	TEO
3	27MAY08	DHE	TEO

CHASSIS DATA
MAKE: PIERCE
MODEL: IX7010

CUSTOMER APPROVAL
APPROVED BY: _____
DATE: _____

Pierce MANUFACTURING INC.

TITLE: HEAVY DUTY RESCUE NON-WALKIN
FOR: FOOTHILLS FIRE PROTECTION DISTRICT FOOTHILLS,CO
DWG NO.: 21153AD

JOB NO.	21153
SCALE	1:24
DATE	
DRAWN BY	DHE 26MAY08
CHECKED BY	TEO 26MAY08
SHEET SIZE	D
SHEET NO.	1 OF 1